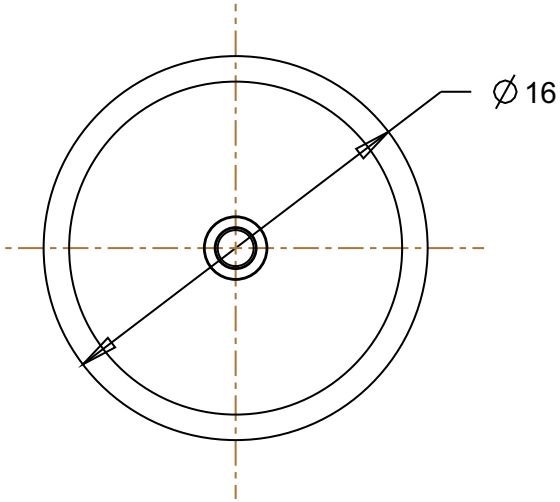


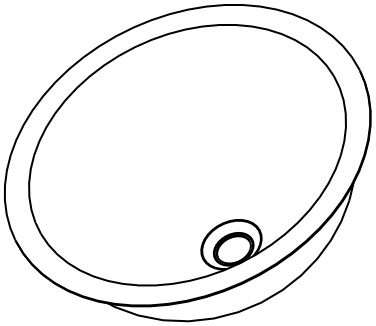

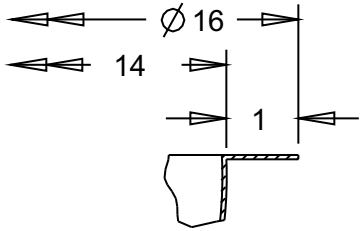


UNDER MOUNT DETAIL
DETAIL C
SCALE 0.375

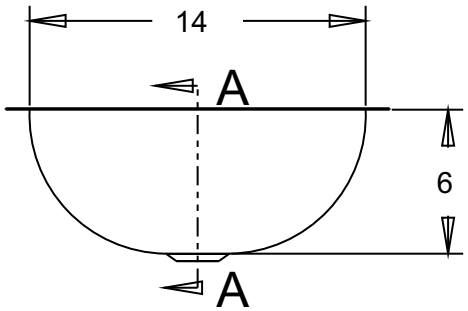


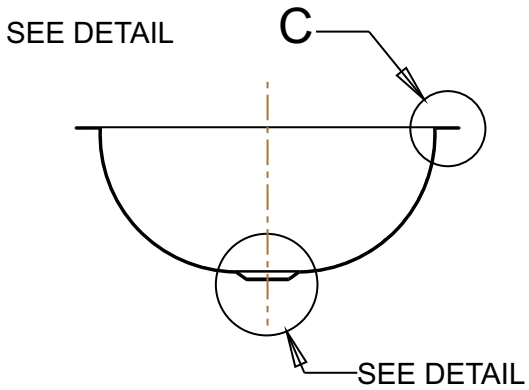


SECTION A-A

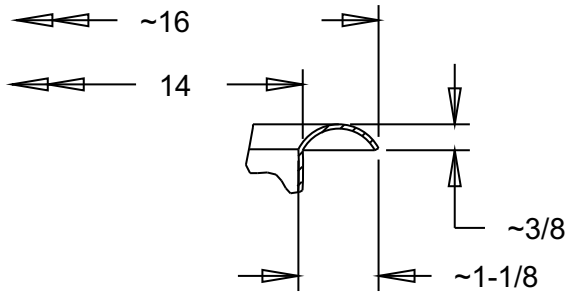


B VESSEL AND SURFACE MOUNT
RIM DETAIL
DETAIL C
SCALE 0.375

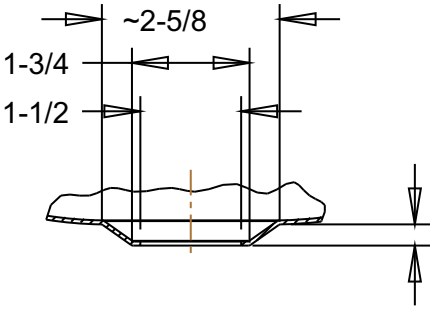


DRAIN DETAIL
DETAIL B
SCALE 0.350

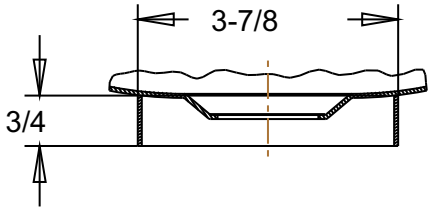


VESSEL MOUNT
DETAIL B
SCALE 0.350

| | | |
|---|---|---|
| BRCS305<br>Spartanika Copper Vanity Sink | | |
| **Veried by:**<br>. | **Material:**<br>16ga. Copper | |
| *Masterpiece Sinks* | | |
| | **Scale:** | **Date:**<br>. |